DUAL DIMENSIONS INCHES [MILLIMETERS] (ESTIMATING ONLY)

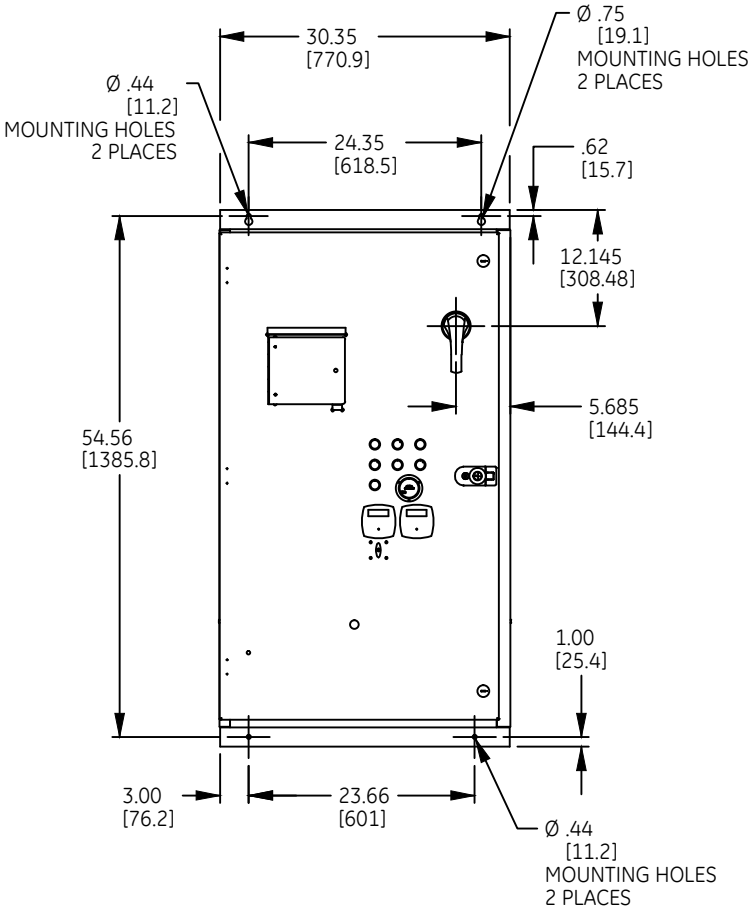

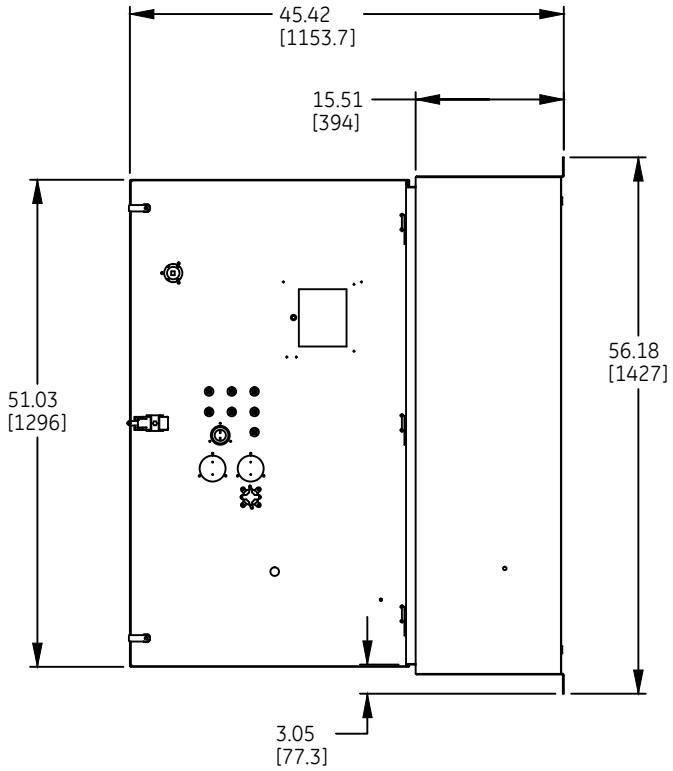

DOOR OPEN AT 90°

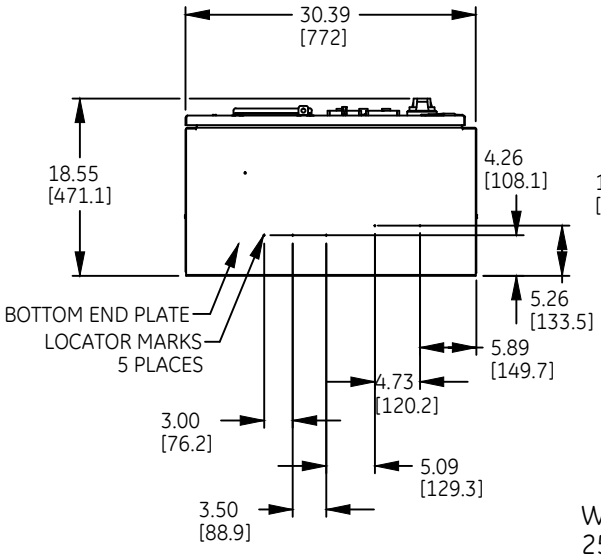

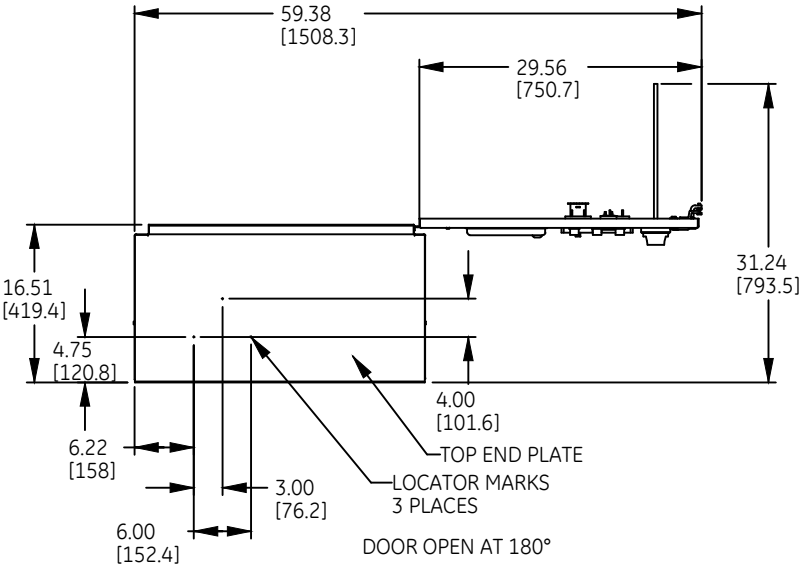

DOOR OPEN AT 180°

WEIGHT :306.88 LBS [139.20 KGS]
25-40HP@208V, 30-60HP@230V, 60-100HP@460V, 75-125HP@575V

GE Energy

OUTLINE - ASTAT - XT ENCLOSURE
WALLMOUNT, TYPE-3R

AN #	THIRD ANGLE PROJECTION	SHEET #	DWG NO.	DATE	REV
BL-0471		1 OF 1	270A8117	07/06/10	3