Front View

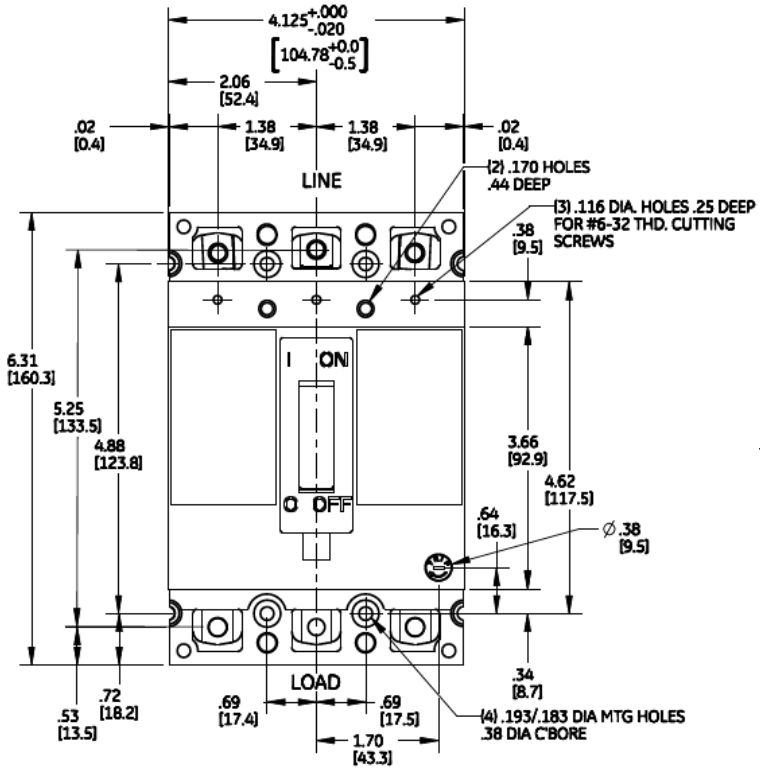

Side View

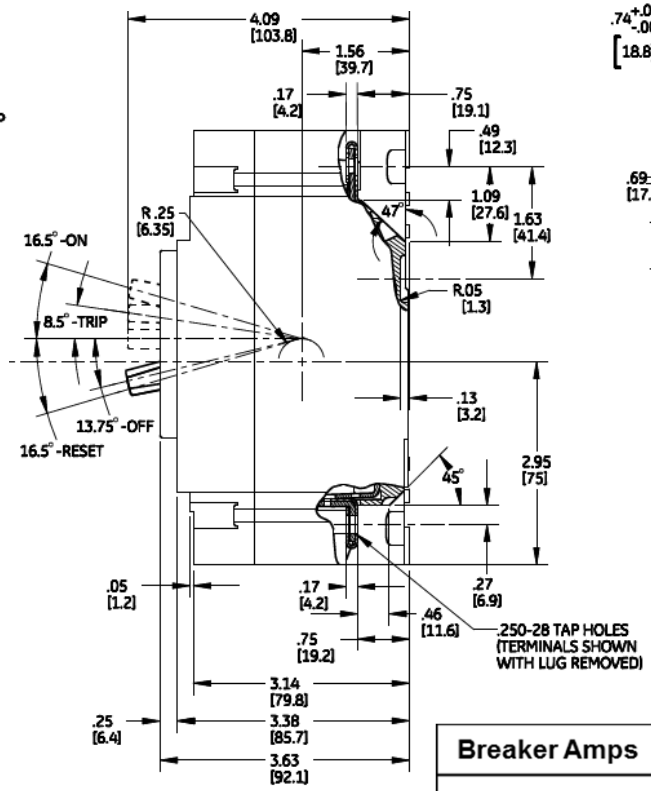

Terminal Info

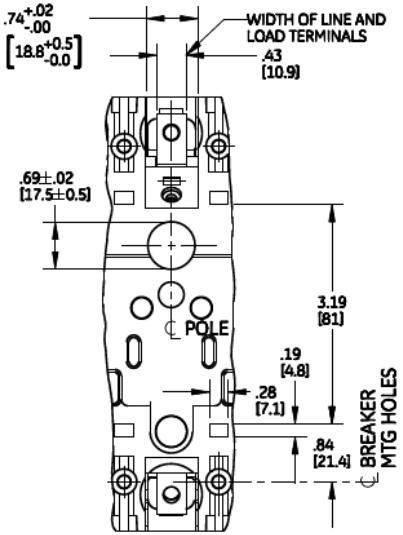

Bottom View

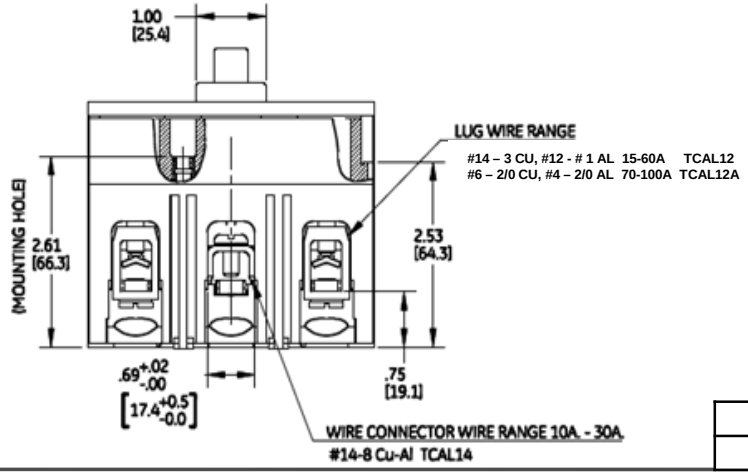

Breaker Amps	Load Side Wire Range Size
15-60A	(1) #14 - #3 (CU) (1) #12 - #1 (AL)
70-100A	(1) #6 – 2/0 (CU) (1) #4 – 2/0 (AL)

imagination at work

80A 3PH TEB BREAKER 10K @ 208Y/120
FOR USE WITH GE METER STACKS– 225A SOCKETS

PUBLICATION #	CAT NO	DWG DATE	REV #
DEE-849	TEB132080	12/14/2015	01