Front View

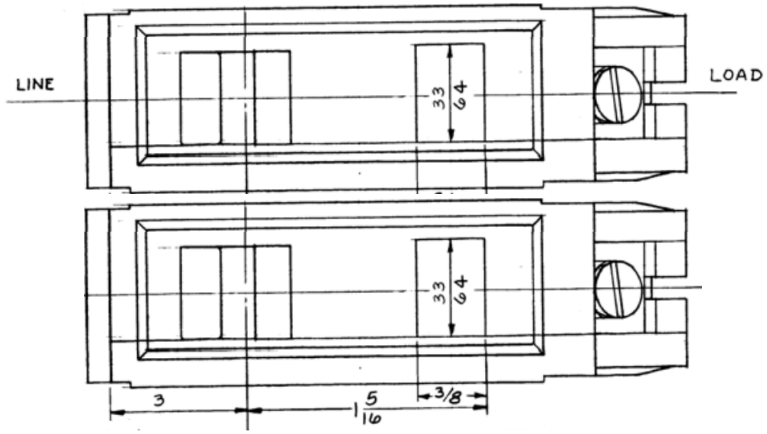

Side View

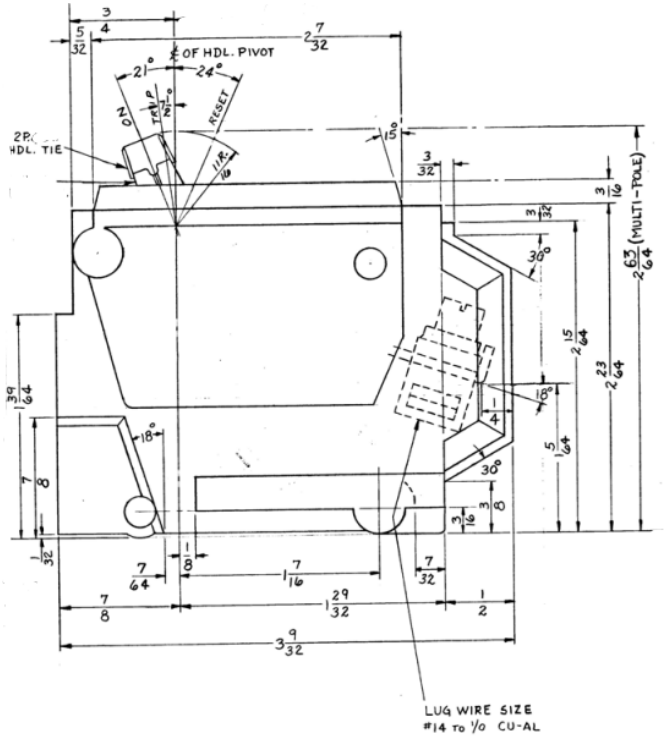

Bottom View

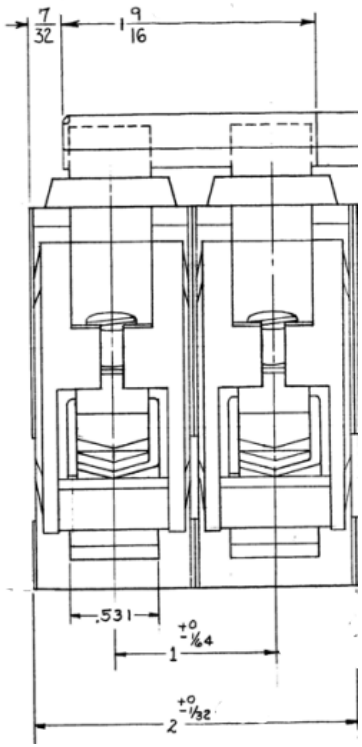

Breaker Amps	Load Side Wire Range Size
60A	(1) #8 - #3 (CU) or (1) #8 - #3 (AL)
70-100A	(1) #6 – 1/0 (CU) or (1) #4 – 1/0 (AL)
110-125A	(1) #2 – 2/0 (CU) or (1) #2 – 2/0 (AL)

imagination at work

100A 2PH THQL BREAKER 10K @ 120/240V
FOR USE WITH GE METER STACKS – 125A SOCKETS

PUBLICATION #	CAT NO	DWG DATE	REV #
DEE-856	THQL21100	10/16/2015	01