-LEGEND-

N.O.R.F.A. CONTACT : CONTACT SUPPLIED FROM THE FIRE ALARM SYSTEM TO INITIATE THE SHUNT TRIP.

SHUNT TRIP : SOLENOID THAT REMOTELY TRIPS THE SWITCH AND IS ACTIVATED BY THE CLOSING OF THE FIRE ALARM CONTACT OR KEY TEST SWITCH.

CR : CONTROL RELAY USED TO ISOLATE THE REMOTE CONTACT FROM THE SHUNT TRIP.

FR : RELAY USED TO MONITOR THE VOLTAGE IN THE SWITCH FROM A REMOTE LOCATION.

PL : PILOT LIGHT THAT INDICATES CONTROL VOLTAGE ON THE OUTSIDE OF THE ENCLOSURE.

- ● INTERNAL CONNECTION POINTS
- ■ CUSTOMER CONNECTION POINTS

TB TERMINAL BLOCK

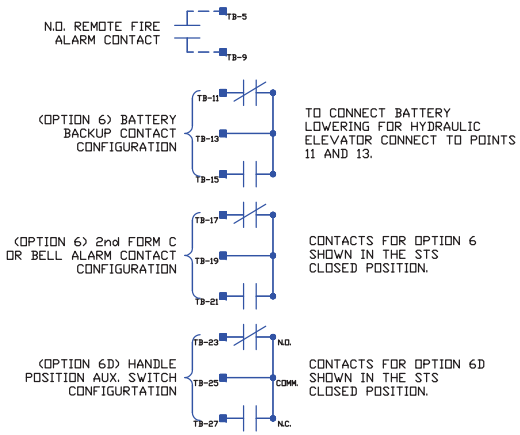

(OPTION 2) RELAY CONTACT CONFIGURATION

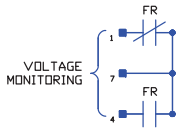

NOTE: CONTACT ARE SHOWN IN DE-ENERGIZED POSITION.

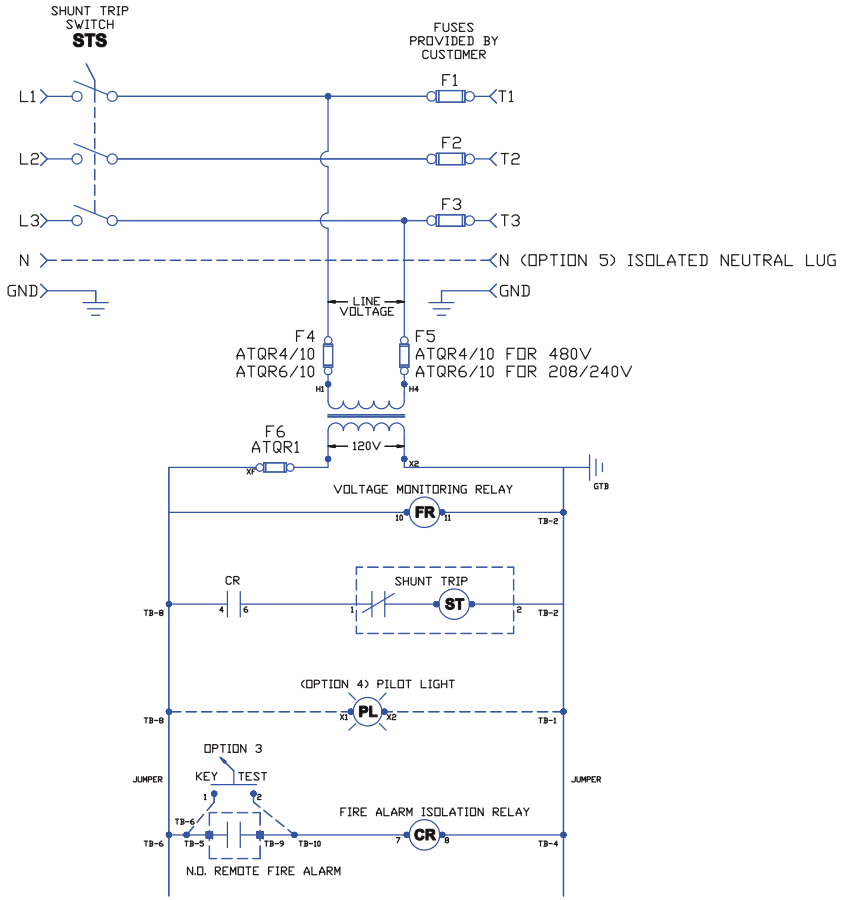

MERSEN

MERSEN CANADA TORONTO INC.
660 HORNER AVE. TORONTO, ONTARIO, M8Z 5Y3

THIS DRAWING AND ALL INFORMATION THEREON IS THE PROPERTY OF MERSEN CANADA TORONTO INC. AND IS SUBJECT TO RETURN ON DEMAND. THIS INFORMATION IS CONFIDENTIAL AND MUST NOT BE MADE PUBLIC OR COPIED UNLESS AUTHORIZED.

DRAWN BY:	DATE:	CHECKED BY:	DATE:
GO	06.03.10	RMcD	06.03.10

ENGINEERING APPROVED DATE:

FOR MFG:

ENGINEERING APPROVED DATE:

AS BUILT:

DESCRIPTION: SCHEMATIC DIAGRAM ES1, ES3, ES6, ES2 AND ES4

DRAWING/PART NUMBER: ESTSCH001

GENERAL NOTES:

ALL DIMENSIONS IN INCHES[mm].

TOLERANCE TO BE APPLIED UNLESS OTHERWISE SPECIFIED: .XXXX±.0005, .XXX±.005, .XX±.020, X/32±1/64. UNSPECIFIED ANGLES ± 1°. SPECIFIED ANGLES ± 0°30'. DIMENSIONS APPLY AFTER PLATING.

ALL SURFACES TO BE 125 UNLESS OTHERWISE SPECIFIED.

BREAK ALL SHARP EDGES.

MFG REF: ____

FILE #: EP_

INITIAL RELEASE ECO NO: ...

SCALE: N.T.S.

PART NO. (WHEN DIFFERENT THAN DWG): .....

SHEET 1 OF 1

REV. –