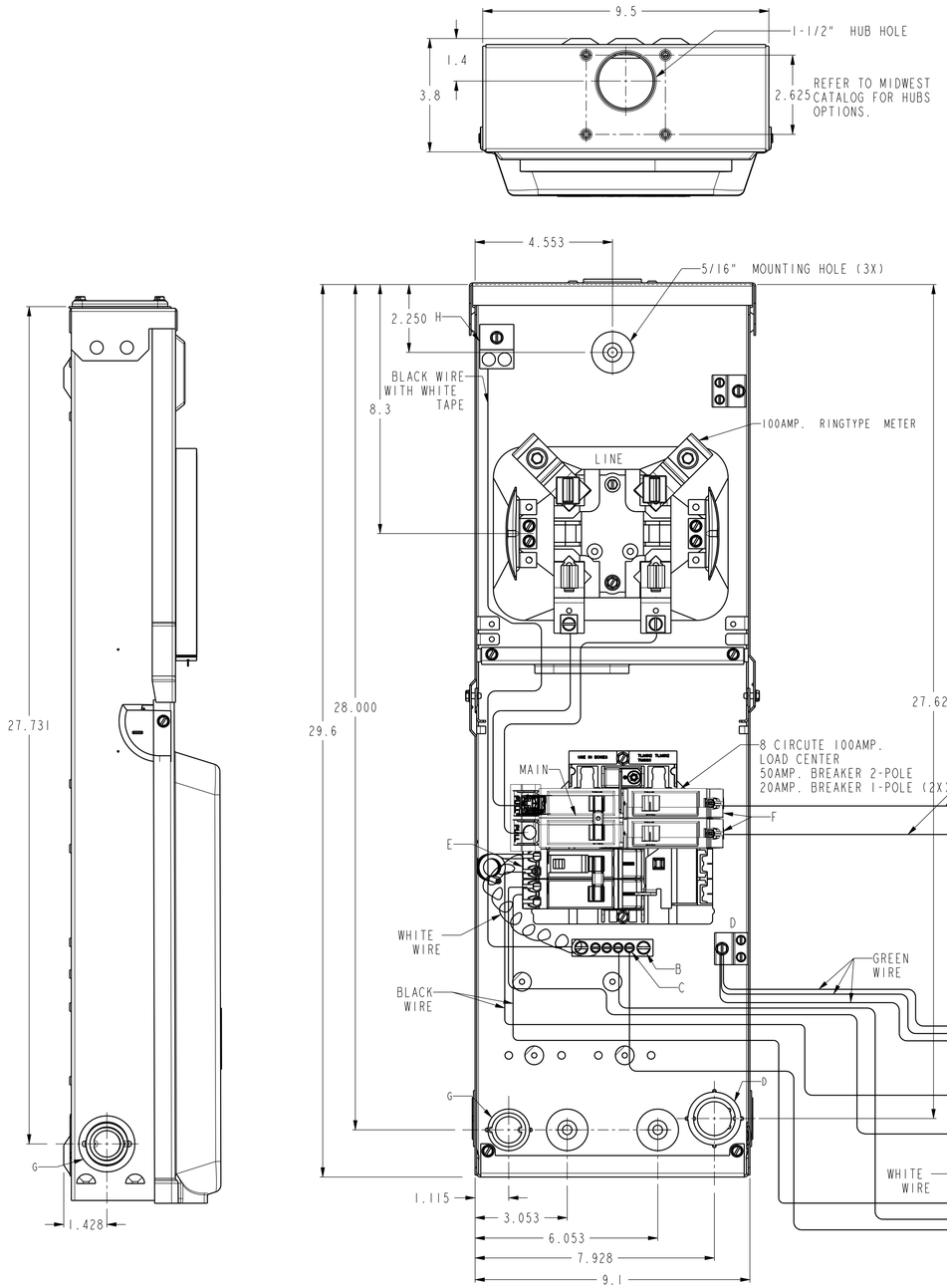

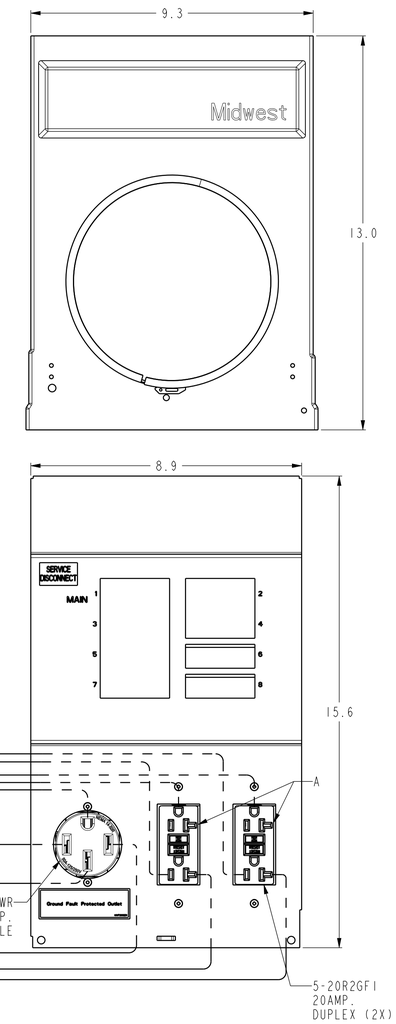

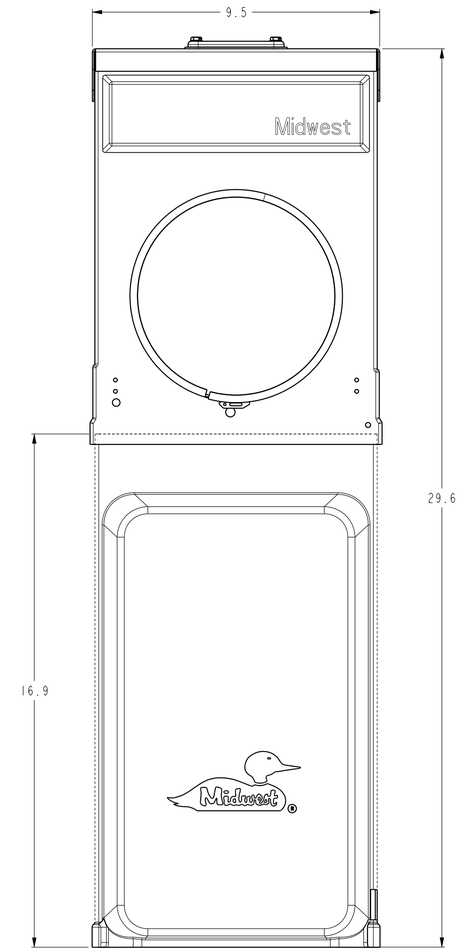

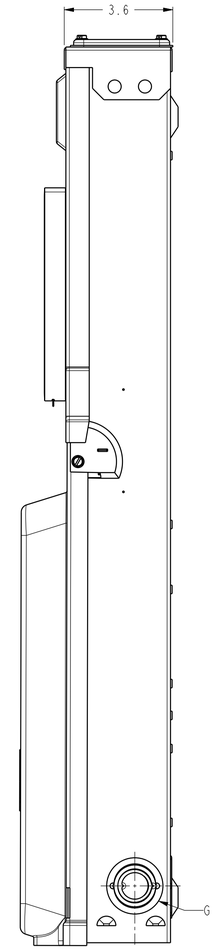

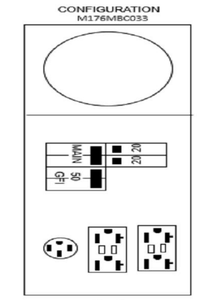

Fig. A
M176MBC033
R54UWR, 20A GFCI & 20A GFCI

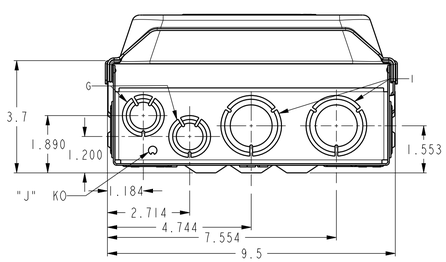

KNOCKOUT TABLE:
G= 1/2", 3/4", 1" KO
D= 3/4", 1", 1-1/4" KO
I= 1", 1-1/4", 1-1/2" KO
J= 9/32" KO

WIRE RANGE TABLE:				
CONNECTOR	COPPER		ALUMINIUM	
	SOLID	STRANDED	SOLID	STRANDED
LINE	--	6-350	--	6-350
LOAD "A"	14-10	14-10	--	--
NEUTRAL "B" END HOLE	12-8	12-1/0	10-8	10-1/0
NEUTRAL "C" SIDE HOLE	14-8	14-4	12-10	12-4
EQUIP. GROUND "D"	12-8	12-2	12-8	12-2
NEUTRAL- "H"	-- 14-1/0		-- 14-1/0	

	CIRCUIT PROTECTION	NAME	QUANTITY
MAIN (1 & 3)	THQL21100	2P 120/240V 100AMP	1
"E" 5 & 7	THQL2150GFT2	GFCI 2P 50A 120V	1
"F" (2 & 4)	THQL1120	1 POLE 120/240V 20AMP	2

Midwest Electric Products

TITLE
M176MBC033M01 OUTLINE DRAWING/
CUL 9X30 100A 50/20/20 W/MAIN BKR

TEMPORARY POWER SERVICE EQUIPMENT

SIZE	MODEL	REV
D	M176MBC033	D

SCALE: 3:10 | OUTLINE DRAWING | SHEET 1 OF 1