Front View

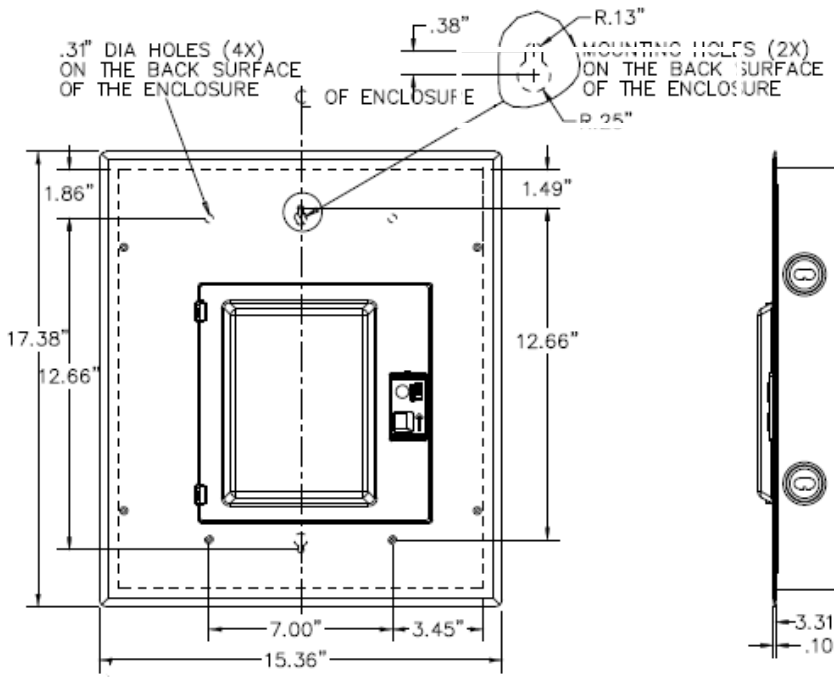

Right Side View

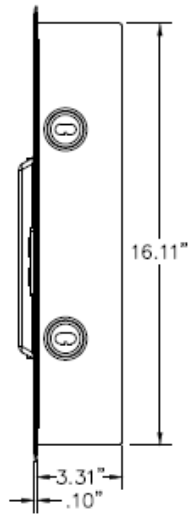

Knockout View

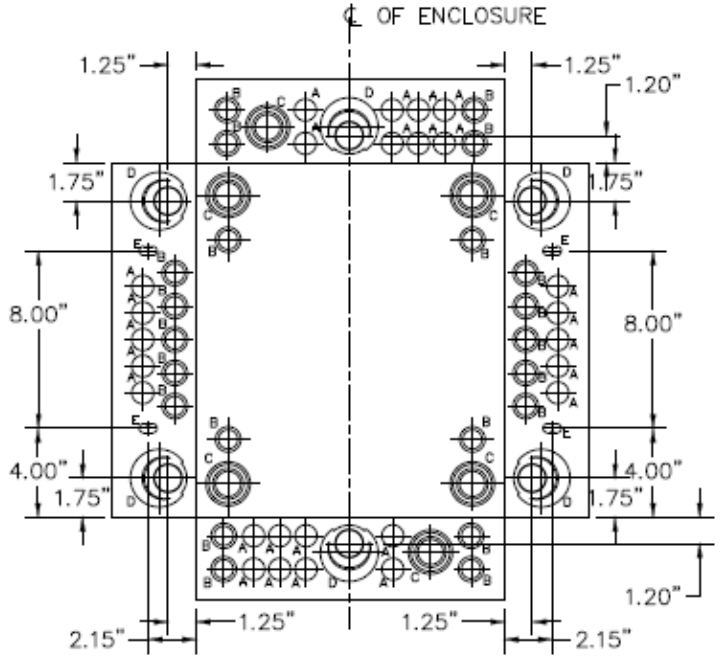

Knockouts

SYMBOL	SIZE	QTY
A	1/2KO	26
B	1/2 X 3/4KO	22
C	3/4 X 1 X 1-1/4 X 1-1/2	6
D	3/4 X 1 X 1-1/4 X 1-1/2 X 2KO	6
E	.219 X .08 OBLONG KO	4

Bottom View

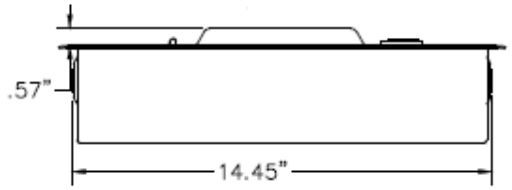

Note : All Dimensions have ±0.125 Tolerance

NOTE: ALL KO LOCATING DIMENSIONS ARE INSIDE OF BOX.

Wire Range Size

(1) #6 - 2/0 (CU/AL)

Midwest Electric Products
Plainville, CT

MIDWEST LOAD CENTER 14/24 CIRCUIT 125A MLO N1
METALLIC ENCL SURFACE/FLUSH TOP/BOTTOM FEED

CAT NO	DWG DATE	REV #
MLM1212CCU	03/29/2017	01