Front View

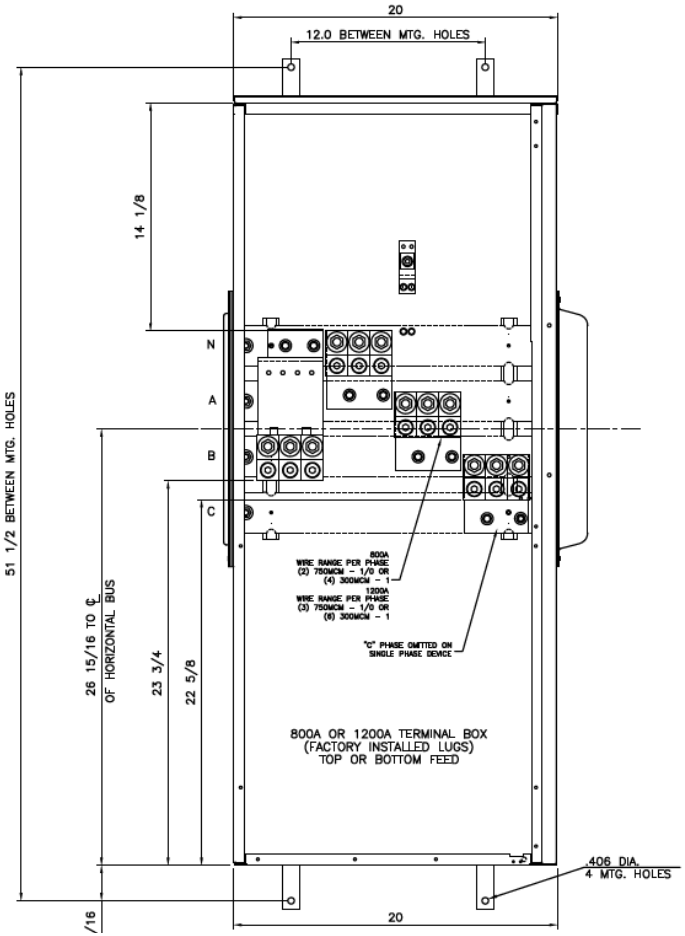

Front Layout View

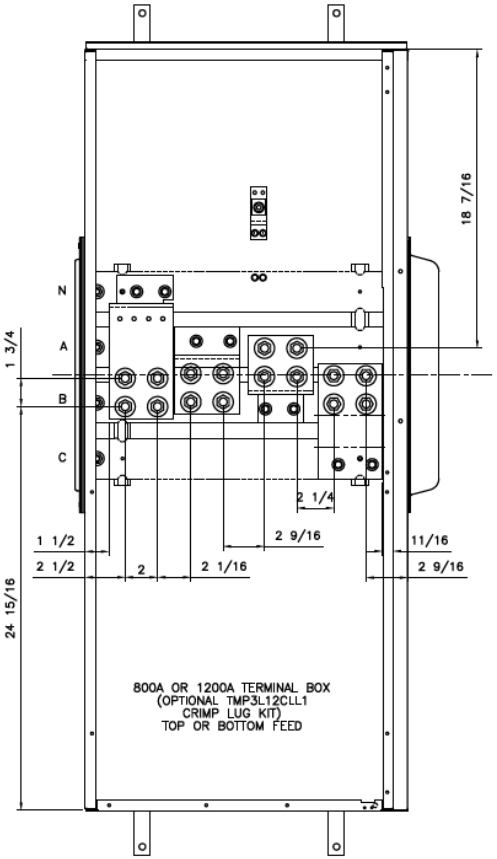

Side View

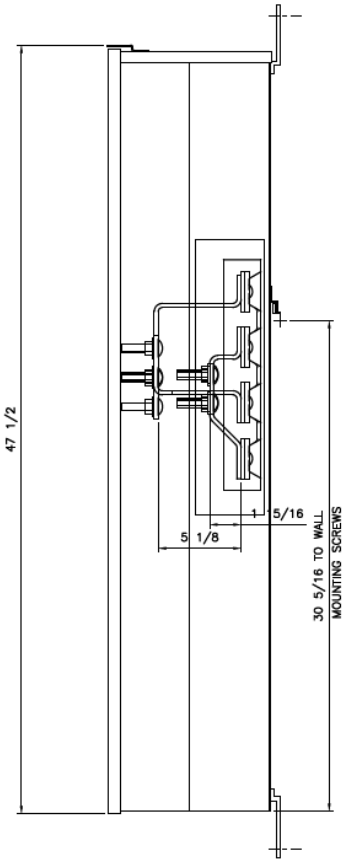

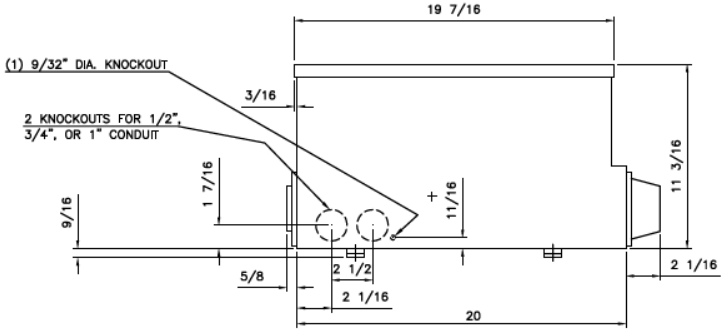

Bottom View

Incoming Cable Sizes:

(3)1/0-750MCM per Ph/Neutral (AL/CU)
-or-
(6)1/0-300MCM per Ph/Neutral (AL/CU)

imagination at work

METER MOD III–1200A MAIN LUG SECTION N3R ENCL
100KAIC 3PH4W 208Y/120V TOP/BOTTOM FEED

REF NO	CAT NO	DWG DATE	REV #
96-6518	TMP3L12R	1/8/2015	01