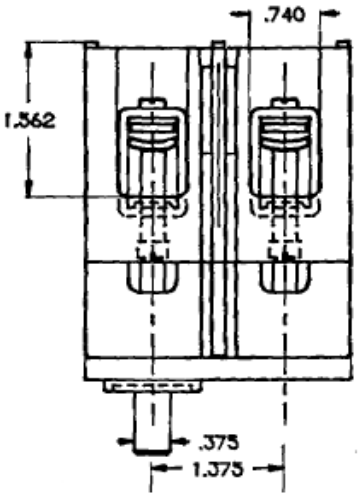

Top View

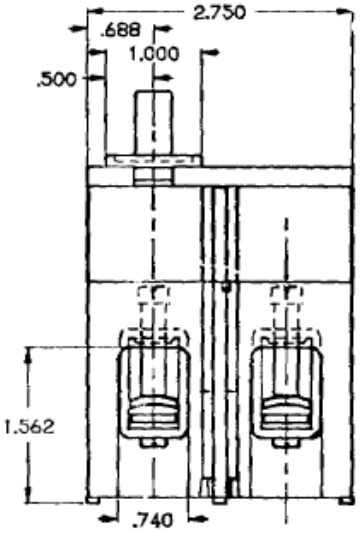

Bottom View

Front View

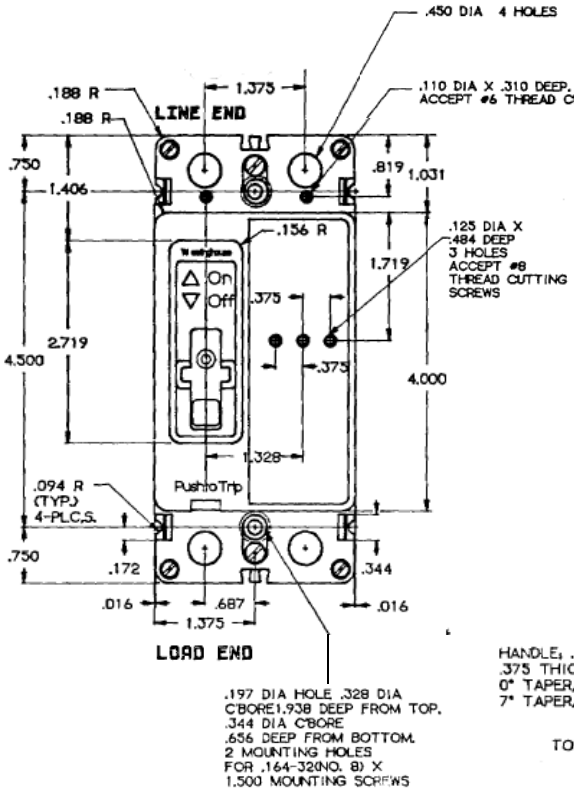

Side View

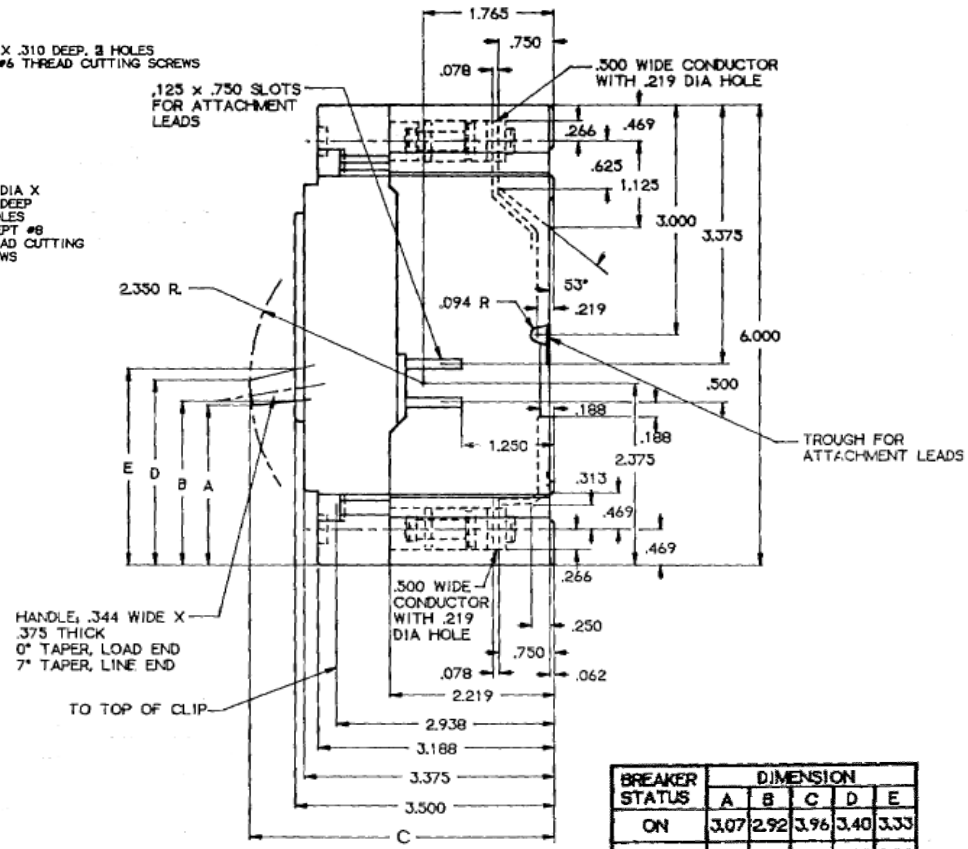

BREAKER STATUS	DIMENSION				
	A	B	C	D	E
ON	3.07	2.92	3.96	3.40	3.33
TRIPPED	2.65	2.57	4.06	2.99	2.98
OFF	2.08	2.14	4.12	2.42	2.56
RESET	1.98	2.05	4.11	2.30	2.48

Breaker Amps	Load Side Wire Range Size
80A	(1) #4 – 4/0 (AL/CU)

MM suffix provides mounting hardware for Residential Meter stacks. Hardware comes in separate bag in the field

imagination at work

80A 2P TMQV BREAKER 100K @ 120/240V
FOR USE WITH GE METER STACKS –200A & 225A SOCKETS

REF NO	CAT NO	DWG DATE	REV #
1490D62	TMQV22080MM	11/05/2015	01